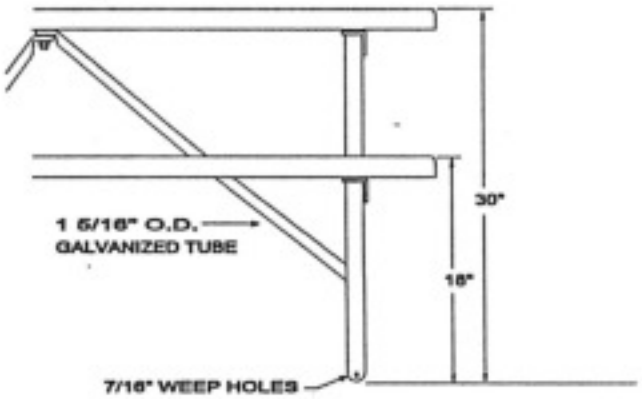

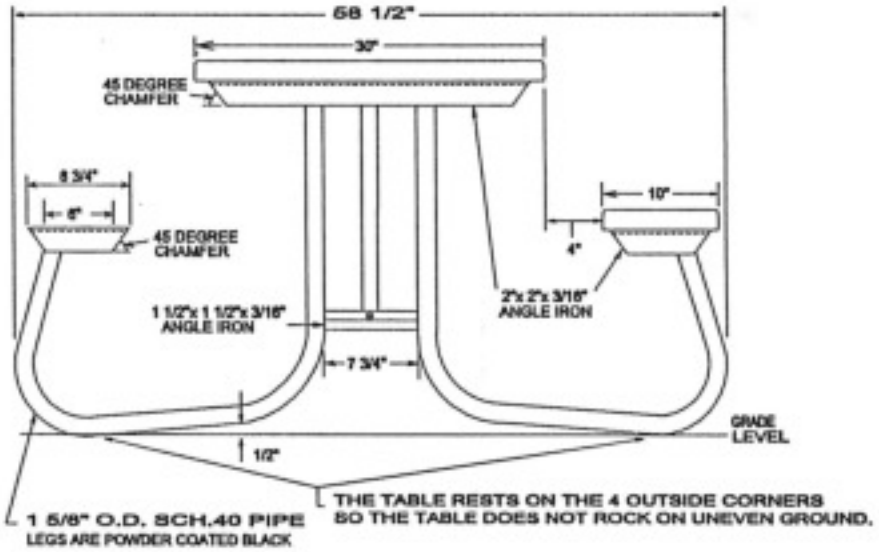

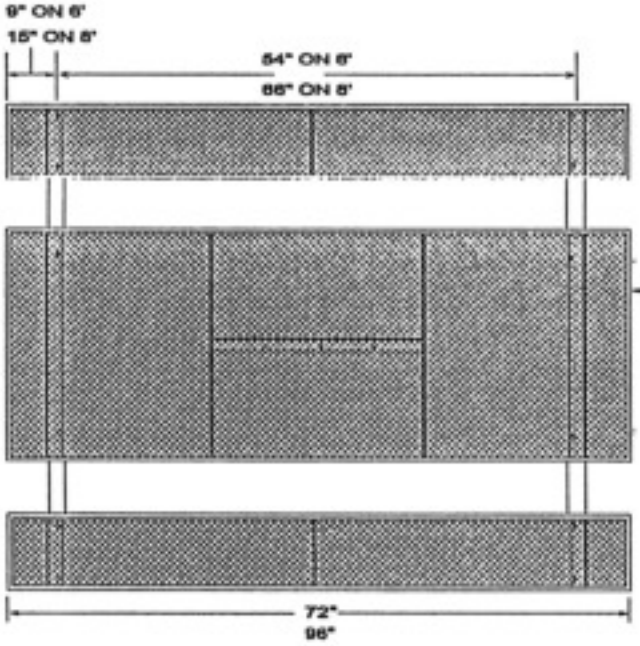

ONE PIECE TOP & SEATS,
MADE WITH 10ga BORDER AND No.9 EXPANDED METAL COATED WITH VINYL PLASTISOL

KAY PARK

MODEL 6/8CJGVP		WT. 6' - 243 lbs. 8' - 291 lbs.	
DRAWN BY LCB	DATE 8/25/92	SCALE NONE	

FILE No. 68CJCVP