KAY PARK RECREATION

MAKING PLACES PEOPLE FRIENDLY • *SINCE 1954*

(800)553-2476 • sales@kaypark.com
1301 Pine St. Janesville, IA 50647

Two Hoop Dog Jump

Model #: **MC2HJ**

Weight: **27 Lbs**

Material: **Thermoplastic Coated**

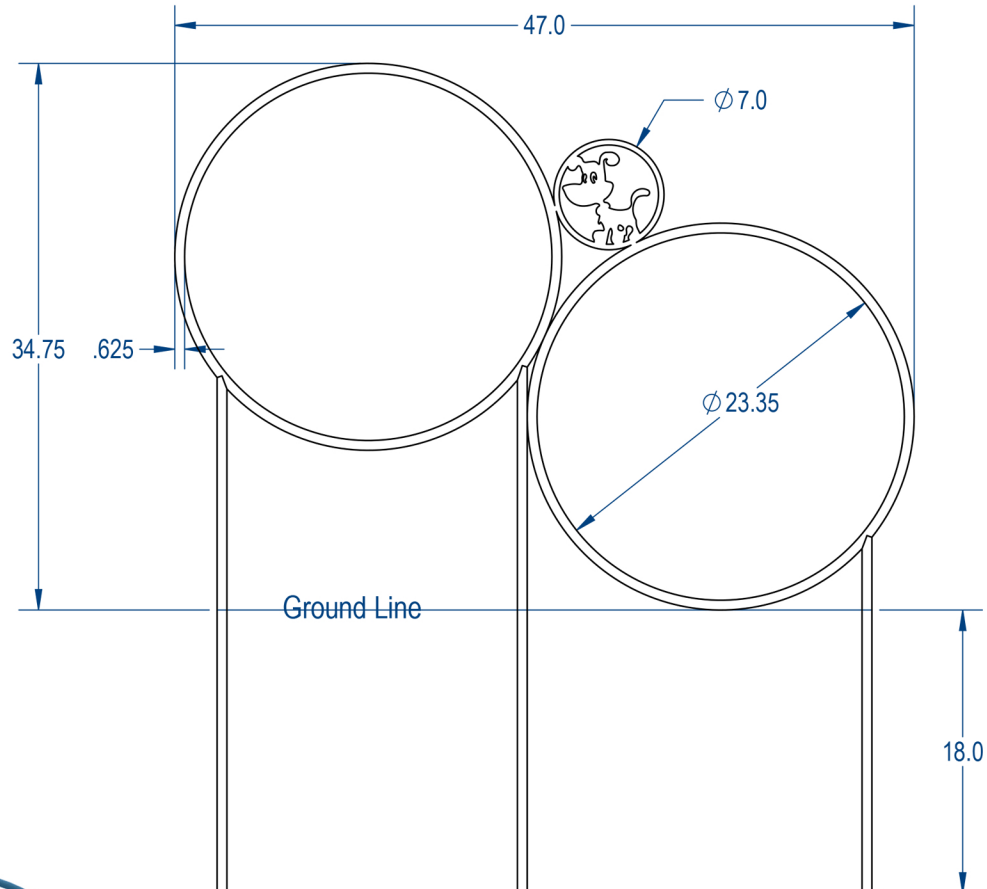

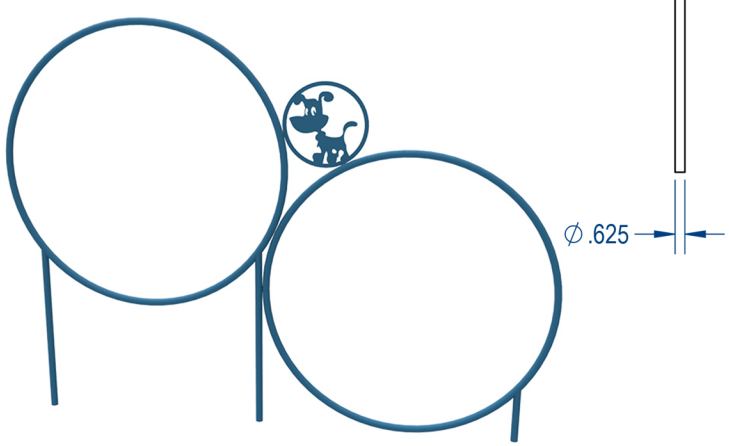

	NAME	DATE
DRAWN	GM	8/9/2017
SALES APPR.		
CLIENT APPR.		
MFG APPR.		
Q.A.		

Design By -
CADWorksPro
Chicago, IL
www.cadworkspro.com

PROPRIETARY AND CONFIDENTIAL
THE INFORMATION CONTAINED IN THIS DRAWING IS THE SOLE PROPERTY OF Aadvantage Panels & Fence, Inc. PO Box 1790 Whitney, TX. ANY REPRODUCTION IN PART OR AS A WHOLE WITHOUT THE WRITTEN PERMISSION OF Aadvantage Panels & Fence, Inc. PO Box 1790 Whitney, TX. IS PROHIBITED.

TITLE: Twp Hoop Dog Jump

SIZE	DWG. NO.	REV
A	THDJ-001	
	WEIGHT:	SHEET 1 OF 1

5 4 3 2 1